Designing and Manufacturing a Rotary Wankel Engine

A Major Qualifying Project
Submitted to the Faculty of
WORCESTER POLYTECHNIC INSTITUTE
in partial fulfillment of the requirements for the
Degree of Bachelor of Science in Mechanical Engineering

By:

William Hopkins
Patrick Leach
Yutai Han
Ryan Gillett

Advised By:

Selçuk I. Güçeri

24th of March 2023

This report represents the work of one or more WPI undergraduate students submitted to the faculty as evidence of completion of a degree requirement. WPI routinely publishes these reports on its website without editorial or peer review. For more information about the projects program at WPI, see http://www.wpi.edu/Academics/Projects.

Abstract

Through thorough design and manufacturing, our team was able to model and construct a rotary engine. We did this by 1) researching different Wankel engines 2) computing the math for the engine shape 3) designing our model 4) machining the parts and 5) constructing the engine and testing it. Once these steps were completed, we had a functioning model of a Rotary Wankel Engine.

The Wankel engine is a type of rotary combustion engine that converts thermal energy into mechanical energy through eccentric rotation movement. Compared to the traditional Otto cycle combustion engine with reciprocal pistons, Wankel engines have fewer moving parts, and therefore are proven to be more compart and smooth during operation. As the world is moving into a unified effort of decarbonization and downsize of combustion engines, Wankel engines are slowly being brought back as a compact solution for source of energy. To have a better understanding of the operation of Wankel engines, and to produce a functioning prototype, the team conducted extensive literature examination and review of the early documents of the development of rotary engine.

Through extensive computation, the team was able to create the epitrochoid shape of the housing that the rotor is sitting in and create the rotor that has similar shape to a Rouleaux's triangle with correlating dimensions. The material of the parts was selected accordingly from the team's research on past development and within the parameter of the project budget allowance. The dimensions were then transferred to computer-aided design and manufacturing software to start the manufacturing process.

Executive Summary

Goals and Objectives

The goal of our team's Major Qualifying Project was to design and manufacture a rotary Wankel engine; recreating the famous engine with modifications of our own to improve the system. In this MQP we worked with the manufacturing laboratory of Washburn at Worcester Polytechnic Institute to machine and construct our rotary Wankel engine.

Proposed Solutions

To carry out the manufacturing, we followed the designing and iterating process shown in many WPI classrooms. We defined our problem by reading articles and interviewing professor Güçeri on the downsides of the rotary engine. We mapped the process and determined the key metrics of the engine to focus on would be:

- Apex seal spring retention
- Electronically controlled ignition timing
- Material choice to avoid pitting and wear

Results

From our research, design, and manufacturing we created a Wankel engine with SolidWorks, Esprit, and the machining tools located in Washburn labs. SolidWorks allowed us to design each part to the specifications of Mazda and other Wankel examples and place it into an assembly for easy view of construction. The software Esprit was the transition from SolidWorks into CAM "g-code" which then allowed us to take our raw material and machine into the parts we needed.

Our newly constructed engine may not solve the downsides of previous Wankel engines, however with the rise of rotary engines once again, we were able to develop a deeper understanding of how the engine itself works. Our mission with this project includes a deeper understanding of a Wankel engine as well as insight and practice with advanced design techniques and manufacturing technologies through the manufacturing of an engine. Knowledge gained will be used demonstrate and explain to others how the engine itself functions.

Acknowledgements

We would like to thank several individuals for their contributions and support of this project.

Selçuk I. Güçeri, WPI Mechanical Engineering Professor, and our project sponsor, for supporting us throughout our MQP, guiding us on where we needed to go next, and his continuous support and enthusiasm for our project.

The Mazda Engineering Team for their base design of the Wankel Rotary engine, and their parameters for which we based ours of off. Without their data we would not have been able to accurately design the rotor or rotor housing without measuring a physical model. Their equations also allowed for the scalability of the parts.

The Mechanical Engineering Department for the use of Washburn Laboratories and for them ordering tooling and material for us to create our engine.

The L. S. Starrett Company for assistance with tooling and allowing us to cut our large stock pieces to size.

Table of Contents

Abstract 2
Executive Summary 3
Acknowledgements 4
Introduction 7
Background 8
Methodology Timeline and Overview 10
A Term: 10
B Term: 12
C Term: 13
Engine Components and our Research 15
Irons 15
Housings 16
Rotors 17
Seals 18
Phasing Gears 20
Eccentric Shaft 21
Manufacturing Considerations 23
Fixturing 23
Conclusion and Recommendations 25
Reflections 26
Works Cited 27

Table of Figures

Figure 1: How a Wankel rotary engine works (Jancer, 2018) 8

Figure 2: Rotor Housing 10

Figure 3: Eccentric Shaft Model 12

Figure 4: Rotor Model sans Seals & Gear 13

Figure 5: Patrick Machining with HAAS VM2 in Washburn Labs……..... 14

Figure 6: Iron under surface grinder 15

Figure 7: Housing with rotor inserted 16

Figure 8: Our machined rotor with phasing gear 17

Figure 9: Image from SolidWorks of rotor with all seals 19

Figure 10: 54T Rotor Phasing Gear 20

Figure 11: Exploded View of Eccentric Shaft 21

Figure 12: Multipart Eccentric Shaft 22

Figure 13: Fixture Plate for Housings and Irons 23

Figure 14: Fixture for rotors 25

Introduction

Automobiles and similar modes of transportation are necessary for modern day lifestyles. These automobiles require engines, engines which already exist but may have glaring flaws. The goal of our team's Major Qualifying Project was to design and manufacture a rotary Wankel engine; recreating the famous engine with modifications of our own to improve the system.

The combustion engine was the driving force behind the industrial revolution and the main powerhouse of human innovation for past decades. Many types of combustion engine were invented throughout the history intended to be used for different purposes. The most famous being the reciprocating piston engine that are commonly used in most of the motorized transportation. Other combustion engines include turbine engines mostly used in the aviation field, and the rotary engine; an alternative solution to the piston engine that has been utilized in different application.

The rotary engine's initial application was in motorcycles, due to its relatively small size and high-power output. Rotary engine reached its peak popularity at the end of the 20th century, where Mazda motor corporation introduced it in a variety of the mass-produced road cars, as well as some high-performance race cars. However, the production of the rotary engine was slowly phased out at the turn the of century due to its relatively high consumption of fuel, and the inability to burn fuel cleanly. These were some of the deciding factors at the time; the scarcity of oil, and a general direction for automotive manufacturers to produce more efficient and clean burning cars. Even though the mass production of rotary engine equipped cars ended more than a decade ago, the search for a new application of rotary engine never stopped. Its unique design and compactness keep the search ever moving. There have been series of attempts to revive the rotary engine with modifications to the original design, or as a secondary source of power.. This project will focus on having a rotary engine which is smaller in size than the regular Mazda motor, performing on a similar power to weight ratio.

Background

The rotary Wankel engine was first designed by German engineer Felix Wankel in 1929. The engine was designed to create rotational motion by converting pressure, providing more unform torque, less vibrational movement, and to have a lighter weight than the average piston engine (Hege, 2015). NSU Motorenwerke AG acquired the patent, then licensed the design to other companies around the world.

The rotary engine has a four stroke cycle similar to a piston engine. However, the combustion cycles occur at different locations within the combustion chamber in the rotor housing. The intake, compression, and exhaust of the air is all controlled by the rotation of the rotor, while the spark plug located on the housing ignites the compressed air to initiate the ignition stage. Due to the decreased number of the moving parts in the combustion chamber, rotary engines are able to achieve a higher revolution per minute than traditional piston motors. A visual representation of a combustion cycle is shown below.

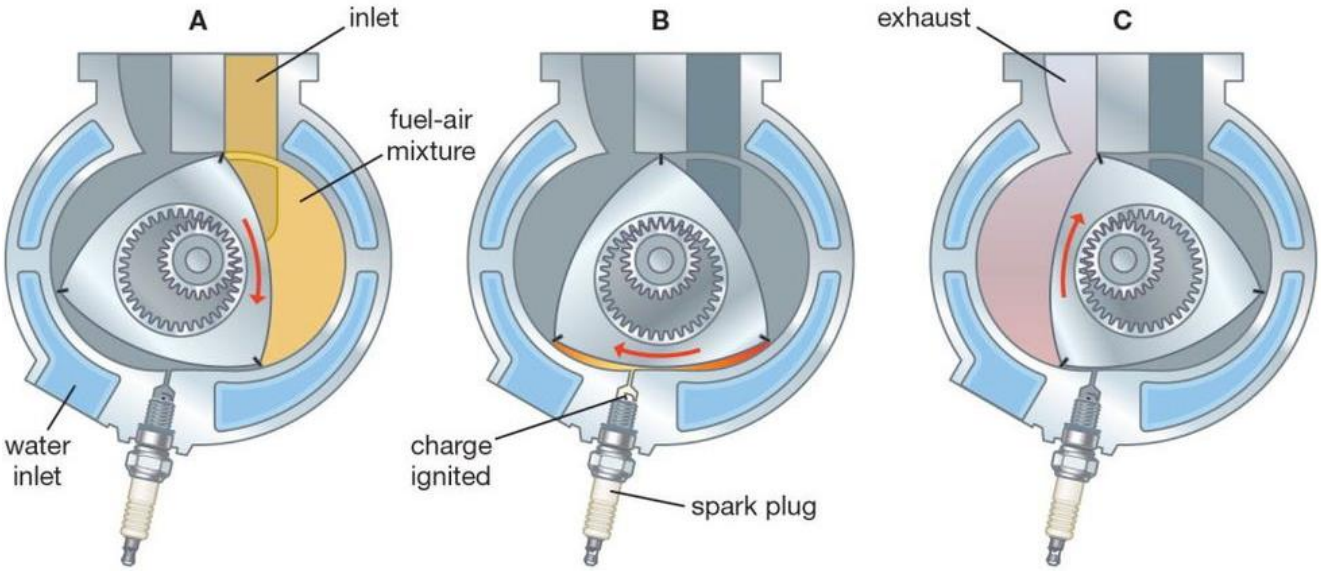

Figure 1: How a Wankel rotary engine works (Jancer, 2018)

Many of the major automotive companies such as Alfa Romeo, American Motors, Citroën, Ford, General Motors, Mazda, Mercedes-Benz, Nissan, Porsche, Rolls-Royce, Suzuki, and Toyota, purchased the license, attracted to its smoothness and light weightiness. Rotaries were utilized in airplanes, motorcycles, but mostly automobiles. Only a few of these companies ultimately followed through with the license however, Mazda, Citroën, and NSU continued to work on the engine. Mazda was the most influential and successful in their research and development on the Wankel engine. Over the years, Mazda has produced many famous cars with the Wankel such as the RX-7 FB, FC, and FD, the RX-8, the 787-B four rotor, and the Cosmo.

The Mazda RX-7 is one of the main sources of inspiration for this project. It is a wonderful automobile, one that has faded out of mainstream due to the issues which arise from the rotary Wankel engine. To revive the Wankel engine would be a magnificent feat, hence why our team has decided to redesign, improve, and construct the engine.

To design and build a rotary engine, there are many more requirements than one may expect. Researching the epitrochoid equations for the rotor housing and rotor requires intense analysis of Mazda technical books, online forums, and insight from Professor Güçeri. Then one must design and create the eccentric shaft, an offset shaft to convert the rotor motion into the drive train. This will require more research and a difficult manufacturing process. Once all the major components of the engine have been created, the seals, fasteners, and extra elements must be either purchased or handmade to construct a functional engine.

Methodology Timeline and Overview

A Term:

During the first of three terms in our group's development time, we began ideating, researching, and designing the engine, while also writing our final report. The three main components which were designed in CAD were the rotor, the rotor housing, and the eccentric shaft. All equations and shapes are modeled after Mazda's patent for the rotary Wankel engine, specifically the 13B.

This process started with the equations for the rotor housing. First modeled in Desmos then SolidWorks, the equation below is foundation for the entire housing.

Figure 2: Rotor Housing

The rotor housing also needs many holes and supports to properly function in its design. Water cooling holes are strategically placed to allow more even cooling of the system. One of the downsides of the rotary engine compared to a piston engine is the uneven heating of the system. Exhaust and combustion take place in certain spots of the rotary, with one segment being just compression and intake, significantly cooler operations. Along with the cooling channels, intake, exhaust, spark plugs, and mounts all needed to be considered and included as well.

The next part of the assembly which was modeled was the rotor which goes within the rotor housing. The rotor is one of, if not the most, essential components of a rotary Wankel engine. To form the outline of the shape, Mazda does provide equations, however these equations are almost impossible to implement into SolidWorks. The equations are all cyclical, continuously calculating the distance from the rotor housing as it goes around in its epitrochoid shape.

The rotor has more components which improve its ability to function. First, there needs to be chambers on the edges for compression. These were determined by measuring the ones on Mazda's rotor, and then scaling it down. In the center of the rotor there is gear teething which connects the rotor to the eccentric shaft. In the final stages of construction, there will be seals along the edge of the gear hole.

The third component which our team began to design and develop was the eccentric shaft. This is one of the more necessary parts for the engine to run. The eccentric shaft is what takes the rotational motion of the rotor and transfers it to the drivetrain. In the simplest terms, it is the connector from the engine to the transmission to then turn the wheels. In theory, the eccentric shaft is a simple piece, a cylinder with some eccentricity set at 3.5/6.2 or 0.5645in. There are not many extra holes, or components coming from it. The issue with the eccentric shaft will be the machining of it. In a lathe the shaft will have to be taken out, and perfectly set to have the eccentricity of 3.5/6.2. The displacement of our engine was calculated to be 488.82cc, this was later confirmed by measurement in Solidworks that gave a displacement of 559.82cc. The difference in volumes was due to the cavities around the apex seals.

B Term:

In the second of our team's three terms to complete the project we finalized the design of the engine and began the manufacturing process. The first hurdle of the team was correcting the gearing within the rotor and the eccentric shaft. The original design had a gear ratio of 1:3, but the correct gearing ratio is 3:2. This was a simple fix to correct, requiring only to change the sketch of the rotor, and changing the original number of teeth from 36 to 54, and the end of the eccentric shaft from 12 to 36. Doing this also increased the size of the gear hole, allowing for a safer and more reliable gear system.

Our team began researching materials to utilize in the manufacturing of the engine. This proved to be slightly difficult. With the status of supply chains and material prices, the pieces we wanted to use were significantly more expensive than we imagined. By doing some slight redesigning and rethinking of materials we were able to drop some of the costs. These costs were supported however by both the MQP grant given to teams, and the support from our professor and contributions from individual team members. For the housing we decided to use 4140 steel, the rotor was decided to be machined from 6061-T6 aluminum, and the other parts were either ordered or made from 4140 steel.

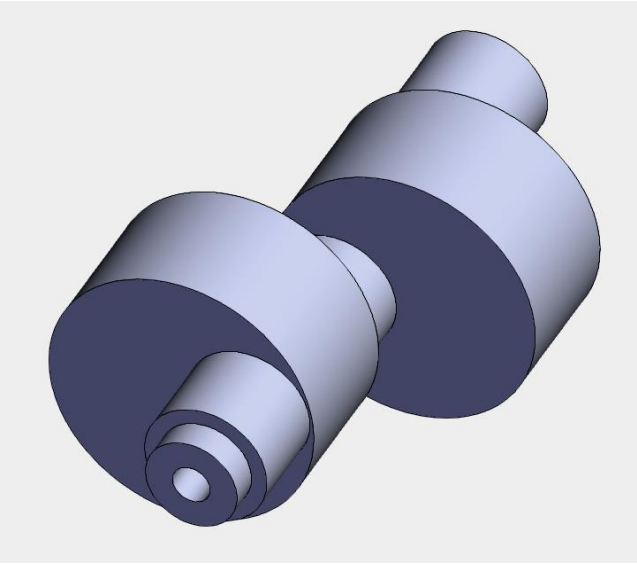

Figure 3: Eccentric Shaft Model

C Term:

Now equipped with the materials we needed to machine our parts; we began our manufacturing in early January. All the SolidWorks parts were transferred over to Esprit, the CAM software used to calculate tooling paths for the machining. With the help from Washburn labs at Worcester Polytechnic Institute, we were able to machine out the engine pieces. The process took a while, and many nights were spent watching the mills and lathes to ensure a smooth and successful operation.

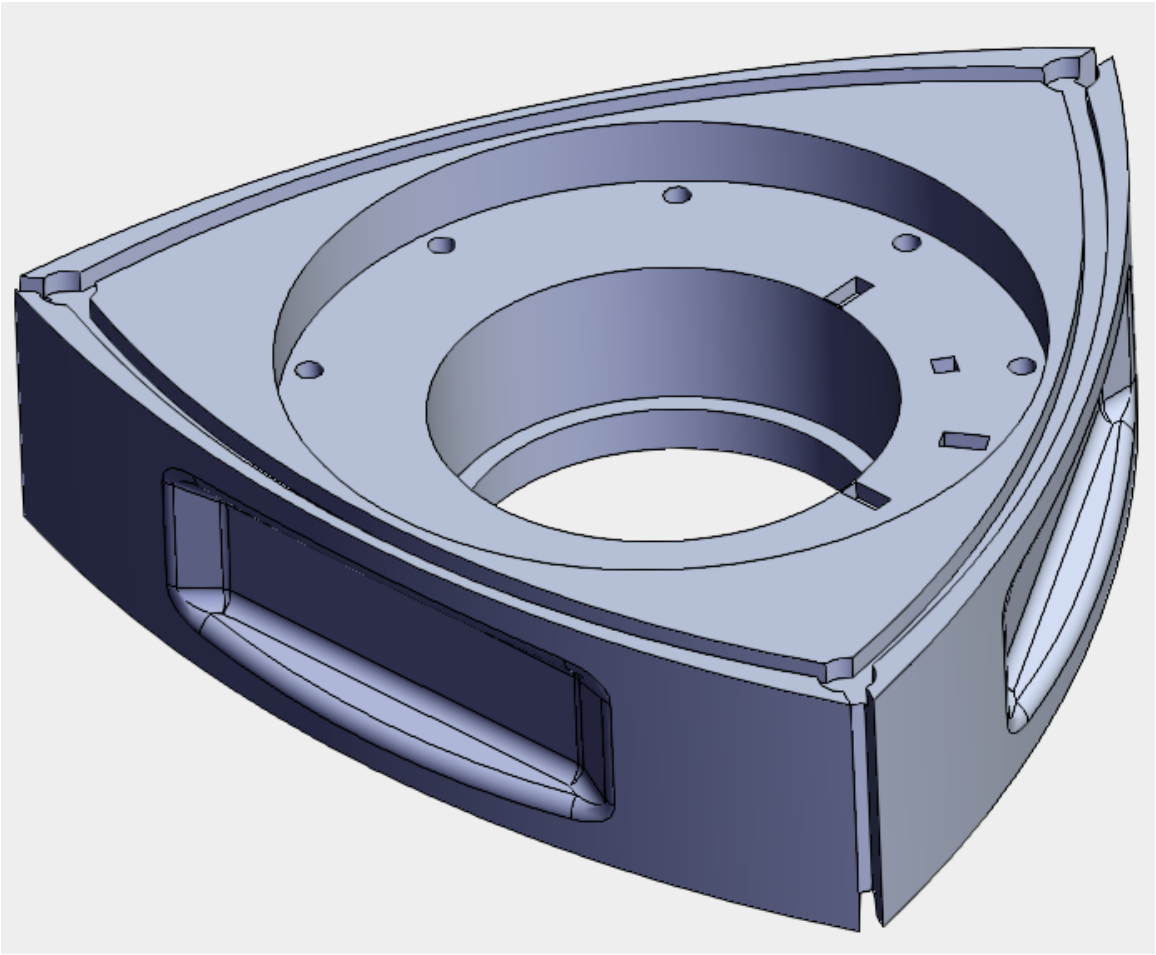

Figure 4: Rotor Model sans Seals & Gear

Over the weeks from January 11th to March 3rd, the rotary engine parts were machined, cleaned, treated, and assembled into our groups' rotary engine. By using 4140 steel, our materials were harder than the normal materials machined in the labs. Our group had to custom order ¼" and ½" ferrous tooling, which resulted in a significant holdup. Additionally, the initial round of tooling was economy tools which, during the milling of one of our irons, broke due to poor quality. Despite these setbacks, we were able to continue forward and have most of the parts machined out for the engine by the end of the term. We constructed and prepped the engine in the final week, with all systems hopefully fully prepared for project presentation day.

Figure 5: Patrick Machining with HAAS VM2 in Washburn Labs

Engine Components and our Research

Irons

The irons are parts of the engine that sit on the sides of the rotor housings. They are responsible for sealing the combustion chamber on the side profile of the rotor. Because the irons are the surfaces that the rotor will be having constant contact at high revolutions with, they are to be surfaced on the face to ensure flatness and smoothness. Also, due the fact that the irons cover a large surface area of the combustion chamber, they have water jackets running through them on the peripheral edge to ensure proper cooling. During our initial design, the exhaust port was located on the iron themselves. This caused exhaust gas to be able to escape through holes on the iron during part of the combustion cycle. However, it was later discovered that the design with the exhaust port on the iron would add significant weight, thickness, cost, and general complexity of manufacturing to the design. The exhaust port was then decided to be relocated to the side of the rotor housing – a design change that proven to be quite beneficial during our manufacturing phase.

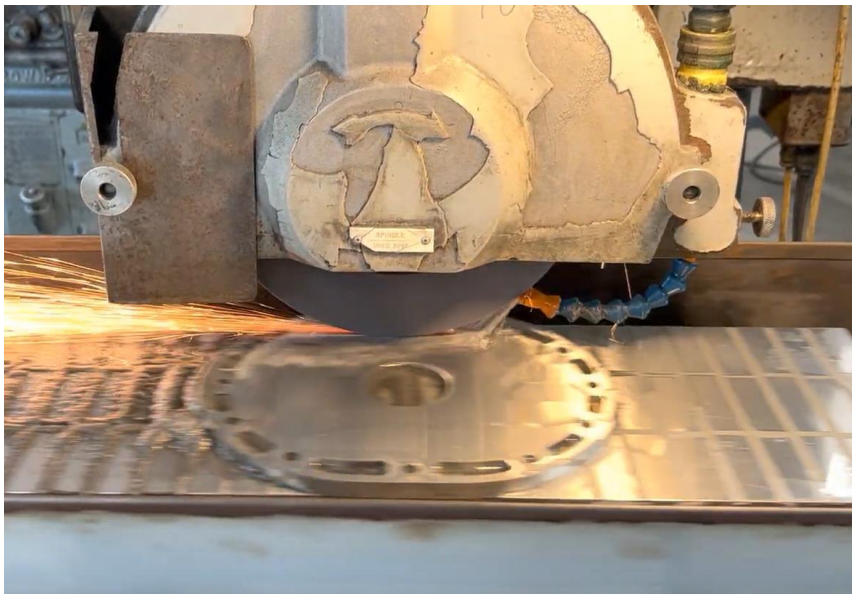

Figure 6: Ce Iron During Grinding

To ensure the flatness and smoothness of the irons, all surfaces contacting the rotor were finished with a surface grinder. This greatly improved the surface conditions on the iron faces and serves to improve the overall tribological interaction between the face seals and the irons.

Housings

The housings are another important aspect of the Wankel rotary engine. The inside walls must be made of a strong material to withstand wear from the apex seals, and also have high temperature resistance, as the combustion is happening within this chamber. The most important design feature of the housing is the epitrochoid shape, given by the equations below:

Both equations are bounded between 0 and 6*pi

X=(.5645)*cos(t)+(3.5)*cos(t/(3))+(.0175)*cos(t/(3)+acos((3*(.5645)*cos((2/3)*t)+(3.5))/(9*(.5645)^2+(3.5)^2+6*(.5645)*(3.5)*cos((2/3)*t))^.5))

Y=(.5645)*sin(t)+(3.5)*sin(t/(3))+(.0175)*sin(t/(3)+asin((3*(.5645)*cos((2/3)*t)+(3.5))/(9*(.5645)^2+(3.5)^2+6*(.5645)*(3.5)*cos((2/3)*t))^.5))

These equations give the shape which the corners of the rotor follow and allow for the eccentricity ratio of 3:2 to remain constant. This shape also allows for the intake, compression, combustion, and exhaust to happen along with the rotor.

These housings also contain holes along the walls, allowing for water cooling, and the assembly of the engine. There are a few access ports along the outer faces, providing access for spark plugs and an exhaust port.

Figure 7: Housing with rotor inserted

Rotors

The rotor is one of the most important aspects of the Wankel rotary engine. It is the component which produces the rotational movement required to generate torque to move the wheels. The rotor is responsible for intake, compression, ignition, and exhaust. Through a connection to the eccentric shaft by a phasing gear, the rotor, or multiple rotors, translate the power into a usable form. Compared to the more common piston engine, rotary engines do not have reciprocating parts, allowing for a much higher RPM, and power to weight ratio. When designing a rotor for a rotary engine, one must keep in mind the material choice, and pocket designs on the side. These pockets allow for more compression, and therefore more power. Mazda has a set design for these compression pockets, however, there has been research (Boughou, Smail, Mohiuddin, 2020) on which orientation is the most efficient. With our rotor, our team decided to replicate to the best of our ability, the design that Mazda uses for their rotors.

Figure 8: Our machined rotor with phasing gear

Seals

Sealing within the Wankel engine is crucial to engine operation. In particular, the seals on the face and points of the rotor are what allow for compression to be built. The seals at the points are called “apex” seals while the seals between the rotor and the irons are “face” seals. Apex seals remain in contact with the housings while the face seals contact the irons. On the corners of the rotors are the “corner” seals. Corner seals are responsible for bridging the gap between the face seals and the apex seals (Rotary Seal Design Guide, 2018). Within the apex and face seals are small springs which provide a light force to keep the seals in contact with their respective surfaces.

In previous Mazda production engines, apex seals were the most common point of failure. The most often failure would be excessive wear of apex seals causing a loss in compression. Additionally, wearing of face seals can cause excessive oil consumption and further loss of power. As a result, Mazda placed a great deal of effort in the design and selection of materials for the seals. They used a (Moskowitz, Uy, 1976) cemented carbide using a molybdenum and nickel binder. The composite material allows for wear resistance while providing sufficient lubrication to prevent housing damage.

For our project, the process to fabricate custom seals following Mazda’s method would exceed our time and monetary constraints. As a result, bronze was used as an alternative. Bronze has excellent wear characteristics which should preserve the life of the housings while still sealing the combustion chamber. Additionally, bronze is moderately hard (Rockwell B90) which should prevent premature failure due to wear. Bronze 510 rod is used to form the corner seals while 1/8” thick bronze 510 plate is cut into strips to form the apex seals. A small 1095 strip of spring steel sits in a machined groove in the apex seal to keep constant contact with the housing. Adapting the design allowed for the seals to be completely machined in the Washburn Labs machine shop.

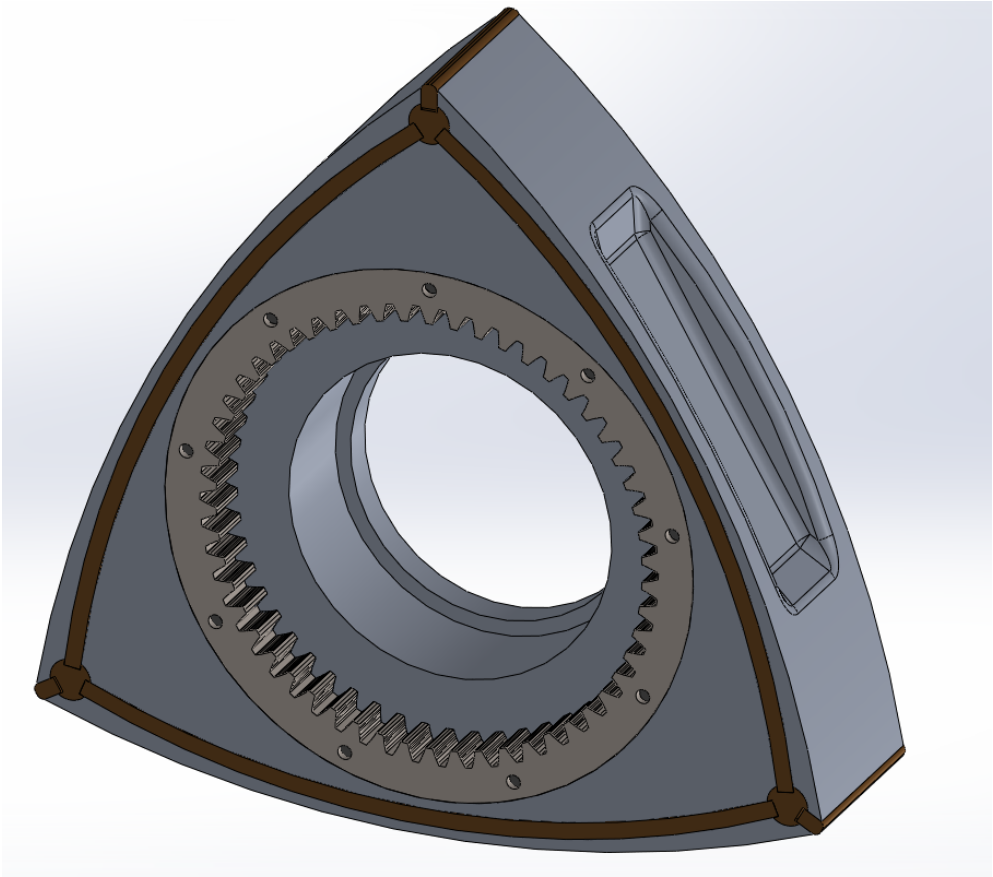

Figure 9: Image from SolidWorks of rotor with all seals. Seals are darker in color to indicate being made of bronze vs the aluminum rotor. Spring is hidden by the apex seal.

Phasing Gears

Another critical component in the Wankel engine is the phasing gears. The phasing gears are responsible for maintaining the angular position of the rotor with respect to the rotation of the eccentric shaft (Kulina, 1986). As a result, the apex seals of the rotor will remain in contact with the housing wall throughout the entire 360° rotation of the E-shaft. The phasing gears achieve the angular control by meshing the rotor to a gear fixed to the iron. The ratio between the rotor gear and the fixed gear is 2:3. The specific size of the gears is driven by the eccentricity in the E-shaft – a value determined at the start of the engine design. The eccentricity value is equivalent to the gear center to center distance. For material, the gears must be durable to wear but do not experience significant forces in operation – they merely maintain proper phasing of the rotor (Kulina, 1986); They should be made of a hardened material such as tool steel.

For our engine, the eccentricity value for the E-shaft is .5645”. With this value, a tooth count of 36 and 54 for the fixed and rotor gear respectively was chosen. The gear profile was generated using an online Gear Generator to reduce the total design time spent on the individual components. The generated profile was then imported to SolidWorks where it was used to construct the gears for the engine. Material for the gears was selected to be 4140 Alloy steel for its high wear resistance ease of machining on a wire EDM.

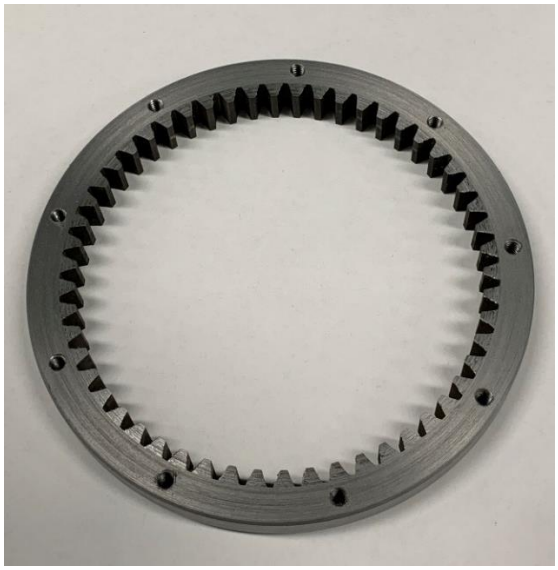

Figure 10: 54T Rotor Phasing Gear. Gear is machined to sit recessed in the rotor like seen in figure 8.

Eccentric Shaft

The eccentric shaft is the component which transfers the orbital motion of the rotor into pure rotation about the shaft's main axis. The shaft is therefore responsible for transmitting the force generated by combustion and must have sufficient strength to resist torsional deflection. Since our engine had no requirements for torque or power figures and our budget was limited, it was decided to manufacture the eccentric shaft to make use of commonly available needle-roller bearings. This type of bearing was selected for its ability to handle high RPMs.

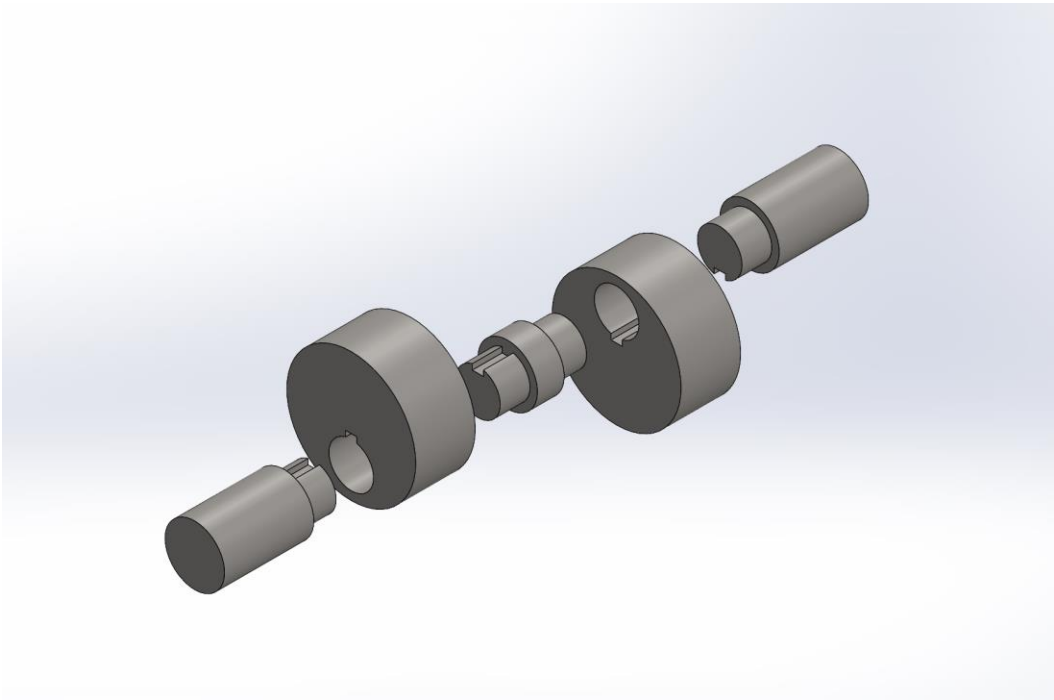

Figure 11: Exploded View of Eccentric Shaft

During the design of our eccentric shaft, a series of geometric limitations became immediately apparent. The outer diameter of the eccentric lobes which the rotor revolves around must be large enough to fully encompass the concentric shaft diameter. This is imperative for the assembly of the engine and is clearly seen on all other eccentric shafts. This was not obvious to the team during the initial design stages. The chosen solution was to use 55mm diameter lobes and 1" diameter on other portions of the shaft, doing such allowed us to minimize the distance between the lobe and main shaft while still using inexpensive, commercially available bearings.

To make manufacturing easier, we chose to make the eccentric shaft from multiple pieces. As seen in Figure 11, the final design of our eccentric shaft made use of reduced diameters keyed to the lobes of the eccentric shaft. The stepped diameter was machined to the same diameter as the bore to allow an interference fit of the two. While a multi-piece eccentric shaft may seem like an unorthodox design choice, Mazda themselves made extensive use of multi-piece eccentric shafts in their three-rotor street and four-rotor race engines; the latter propelling the only rotary-engine car to ever win the 24 Hours of Le Mans (Mazda), a testament to the strength of its design.

Figure 12: Multipart Eccentric Shaft

Manufacturing Considerations

Fixturing

During the manufacture of the engine, much was learned on the topic of workholding. The necessity to locate all parts consistently was made apparent by the fact that any misalignment between components in the assembled engine stack would cause either accelerated wear or a failure to function altogether. To overcome the challenge of misalignment in the X-Y plane on the HAAS VM-2 Milling machine, a locating plate was designed and machined. This plate provided two undersized reamed holes which were press fit with 0.375” precision ground dowel pins. The faces of the plate were left as factory-finished since the material used was Alcoa MIC-6, a cast 7000 series aluminum produced mainly for the purposes of fixturing. Inspection with a Starrett 711 dial test indicator in the machine showed no noticeable deviation in the materials thickness.

Figure 13: Fixture Plate for Housings and Irons

Not only did the fixturing of components require a special tool, but modifications had to be made to the components themselves to allow for their repeatable location. This was accomplished by adding a reaming operation to all holes on the engine's perimeter. This allowed for internal, concentric location of the part – an ideal case when designing fixturing devices of any form (Carr-Lane). The resulting fixture system restricts the part's degrees of relative to the machine to only Z-axis linear translation, this is then secured with conventional strap clamps to result in a firmly held and precisely positioned part.

Similar to how the housings and irons needed repeatable positioning, the rotors for the engine suffered the same issues. After initial shaping, the rotor needed the combustion pockets, apex seal and face seal grooves all milled. To make the setup faster and produce more repeatable accurate results, a fixture plate for the rotor was produced. The fixture plate was made from the same MIC-6 aluminum as the housing fixture plate but instead of pins for alignment, a shadow of the rotor outer profile was milled (see figure 12). When placed in the cutout, only a single bolt was needed to secure the rotor to the plate. The plate was milled with two positions for the rotor – one for the apex seal operation and one for the pocket operation. The shadow cutout would position the rotor so that the objective cutting area was easily accessible by the machine.

For machine setup and CAM generation, the origin of each operation was based on the fixturing plate. This made finding work offsets easier and more reliable throughout various setups. For cutting operations on the outside faces of the rotor, an angle fixture was used to orient the plate vertically in the machine. The use of a fixture plate in manufacturing the rotor allowed for consistent and accurate machined results.

Figure 14: Fixture for rotors. Left cutout is used for milling rotor pockets. Right was used to mill apex seals. The right profile was also used to cut face seals. Both cutouts are located on opposite sides of the same plate.

Conclusion and Recommendations

Constructing something like this requires a lot of attention, detail, dedication, and knowledge of the tools to create it. This is most likely why car manufacturers are so highly regarded, as this technology can be extremely difficult to recreate with limited tools such as the ones provided by WPI. It can however be done. There is necessary research and planning when designing and orchestrating a project such as one of this caliber. It goes all the way from understanding SolidWorks design and designing for manufacturability, to running the CNC machines and understanding how the large manufacturing machines in Washburn work. Some of the more difficult aspects were the after-thought parts of the engine itself. Sealing, lubrication, ignition, timing, all the electronic and fluid parts of an engine many do not first consider when thinking about rotary engines.

If another team were to do this type of project again in the future, it is highly recommended to do plenty of planning and research and begin machining as soon as possible. This advice could go for any project, but without extremely skilled machinists such as Patrick and Will, another team may encounter problems along the way. By giving themselves more time, it allows for more time to adjust from any mistake.

Building an engine not only is a mechanically challenging task, but a mentally challenging one as well. Being able to understand how all the components work together, putting it all together, and physically making it are criteria each member of the team needs to know to complete such a task. Our mission with this project succeeded, as each member of the team has a much deeper understanding of the Wankel rotary engine, and now can display and teach others how the engine itself functions; knowledge which could be passed on to future teams attempting this MQP.

Reflections

After the manufacturing and construction of a Wankel Rotary engine, our team has learned much. We have learned about the rotary engine itself, the process of how it operates, and the parts which go into one. We have also practiced and developed our skills in manufacturing parts and those processes.

Our ability to overcome the obstacles which appeared in our way allowed us to finish the assembly before the deadline. Choosing different material to machine with as our first choices were too expensive, transferring from SolidWorks to Esprit, and other considerations were small hurdles we had to clear as a group before we could be considered finished. Although our design took longer than it could have, we were still able to manufacture the parts required to construct a rotary engine by the end of C term 2023.

Being able to work on such a project has given not only insight on the automotive industry and their standards and practices, but also the world of advanced manufacturing. Before this point, the team had only worked on smaller scale projects assigned by WPI. Now we have both the experience and knowledge to further our careers and teach others.

Works Cited

Beat Racing. (n.d.). *Engine seals.* Rotary Tech Tips: Engine Seals. Retrieved January 18, 2023, from https://www.racingbeat.com/mazda/performance/rotary-tech-tips/engine-seals.html

Boughou, Smail & Mohiuddin, A.. (2020). *Combustion Chamber Design Effect on The Rotary Engine Performance - A Review.* International Journal of Automotive Engineering. 11. 200-212. 10.20485/jsaeijae.11.4_200, https://www.researchgate.net/publication/347189421_Combustion_Chamber_Design_Effect_on_The_Rotary_Engine_Performance_-_A_Review

Hannafin, P. (2018). *Rotary Seal Design Guide (Ser. EPS 5350/USA).* Parker Hannifin Corporation, Engineered Materials Group, https://www.parker.com/content/dam/Parker-com/Literature/Engineered-Polymer-Systems/5350.pdf

Hege, J. B. (2015). *The Wankel Rotary Engine: A History*. McFarland.

Jancer, M. (2018). *Why Car Lovers Are So Mad for Mazda's Rotary Engine Revival*. Popular Mechanics. Retrieved Mach 23, 2023, from https://www.popularmechanics.com/cars/car-technology/a7103/mazda-wankel-rotary-engine/

Kulina, M R. *Experimental evaluation of rotary engine timing gear loads*. United States.

Kulina, M. R. (1986, January 1). *Experimental evaluation of Rotary Engine Timing Gear loads*. Experimental evaluation of rotary engine timing gear loads (Conference) | OSTI.GOV. Retrieved March 23, 2023, from https://www.osti.gov/biblio/5501534

Mazda. (n.d.). *50 years of Rotary Revolution: We are Mazda.* 50 YEARS OF ROTARY REVOLUTION | We are Mazda. Retrieved January 18, 2023, from https://www.mazda.com/en/innovation/mazda-stories/mazda/rotary_revolution/

Mazda. (n.d.). *How Mazda Won 24 Hours of Le Mans*. We are Mazda. Retrieved March 23, 2023, from https://mazdastories.com/en_us/innovate/how-mazda-won-24-hours-of-le-mans/

Moskowitz, D., Uy, J. C. (1976, September 21). *Apex seal composition for rotary engines.*

(n.d.). *Locating and Clamping Principles*. Carr Lane Mfg. Co. Retrieved March 23, 2023, from https://www.carrlane.com/engineering-resources/fixture-design-principles/locating-clamping-principles

Mazda Housing design choices PDF